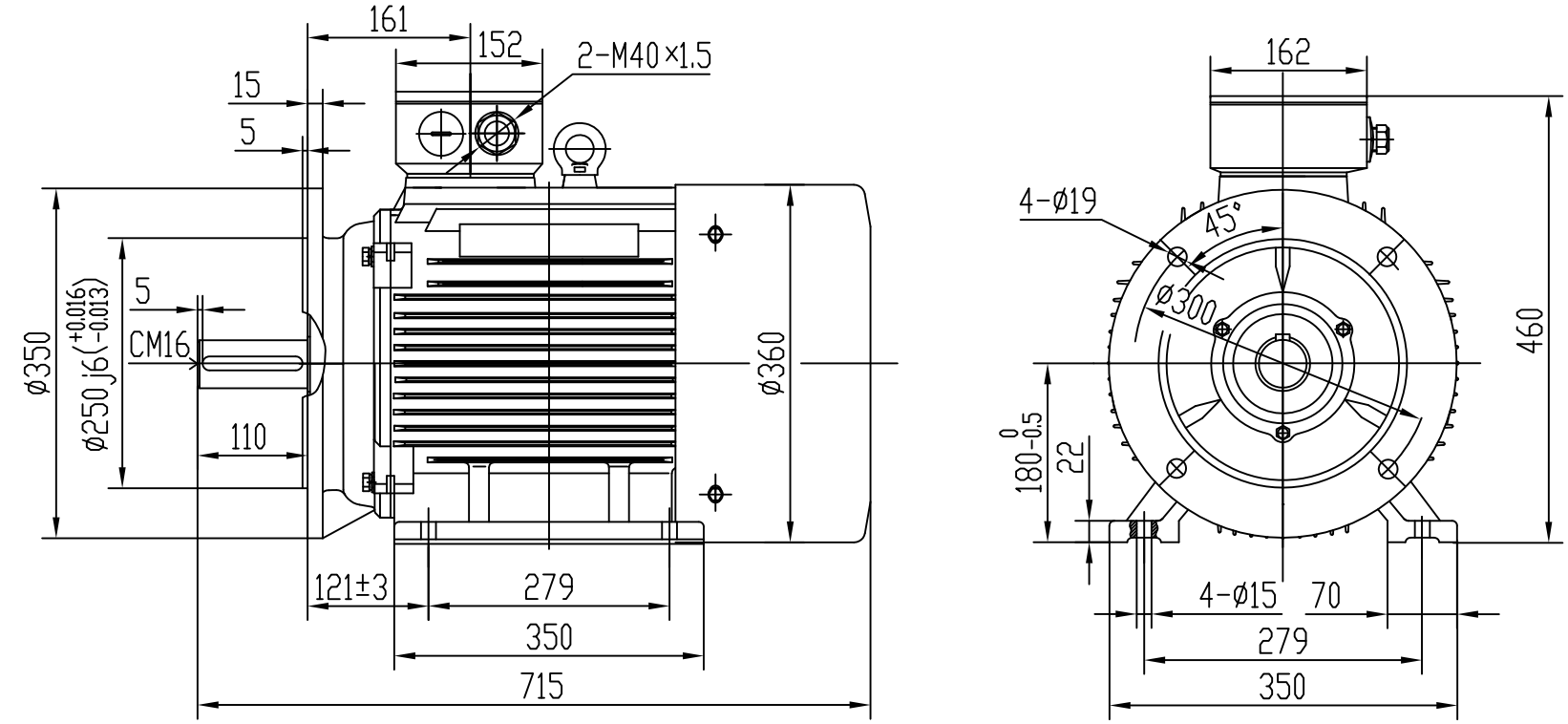

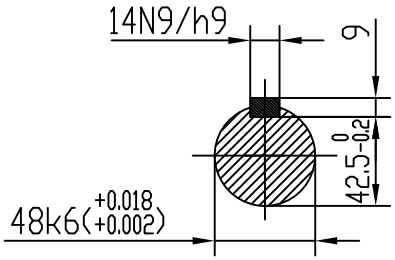

							EM2-180L B35
	EM2-180L B35						
Mark	Drawing Number						
Design			Standard	Sign		Weight	Scale
Check							1:7
Auditing							
Technics			Approval	Total	page	page	page No.

ELMA motors