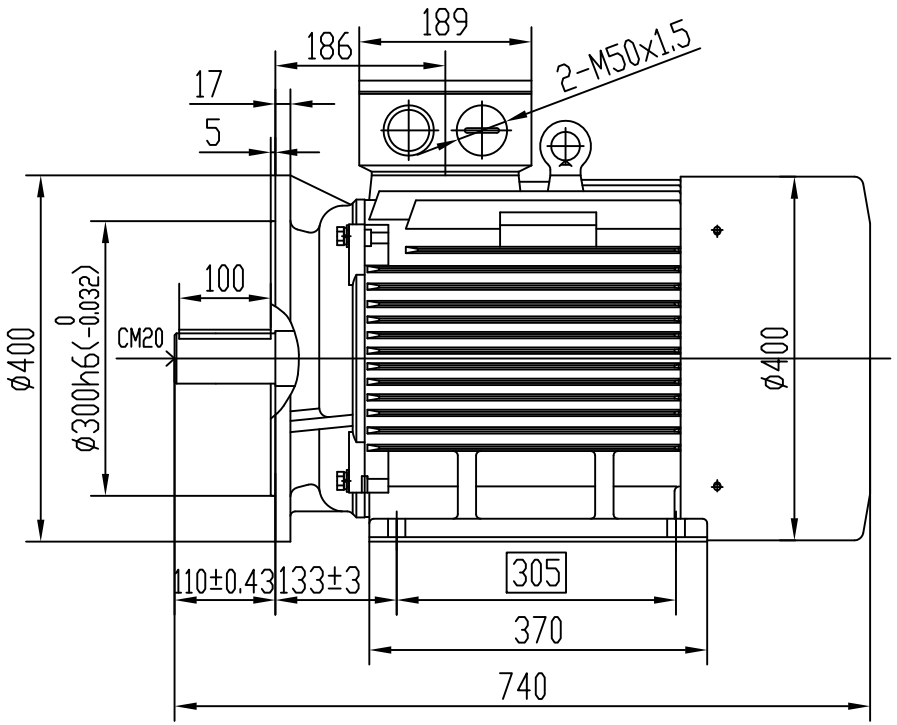

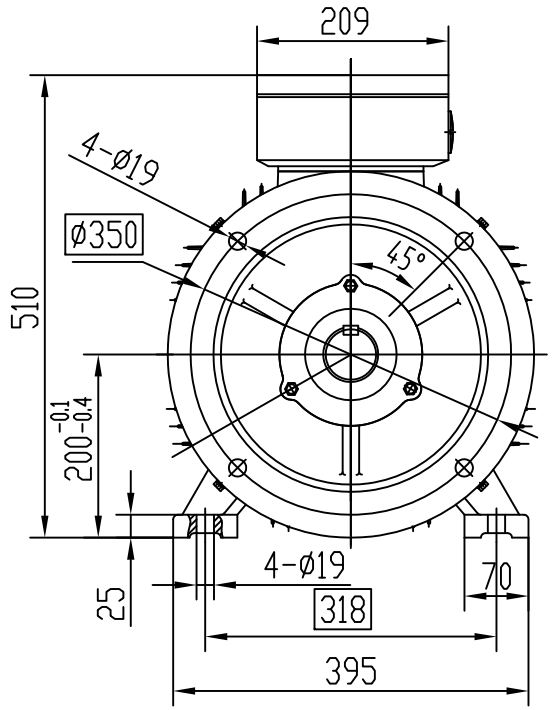

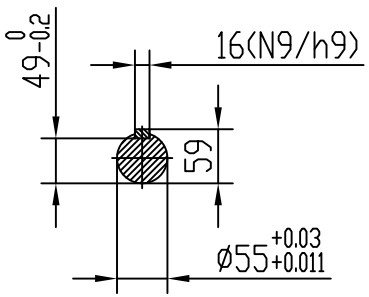

							EM2 200L B35
	EM2-200L B35						
Mark	Drawing Number						
Design			Standard	Sign		Weight	Scale
Check							1:8
Auditing							
Technics			Approval	Total	page	page	No.

ELMA motors