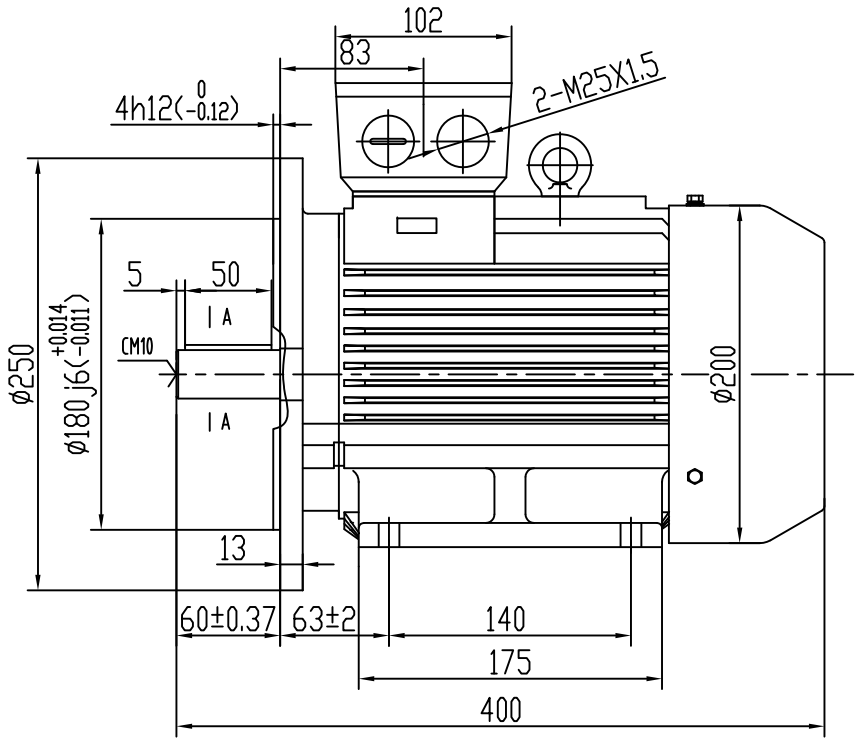

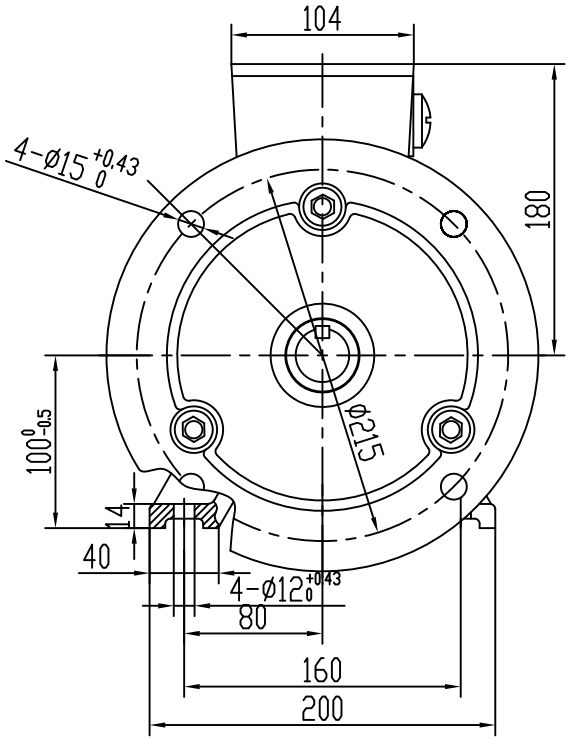

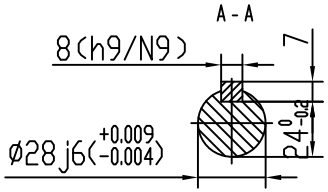

						EM2-100 B35
	EM2-100 B35					
Mark	Drawing Number					
Design			Standard	Sign	Weight	Scale
Check						1:3
Auditing						
Technics			Approval	Total page	page No.	

ELMA motors